BF519 EXPLODED VIEW

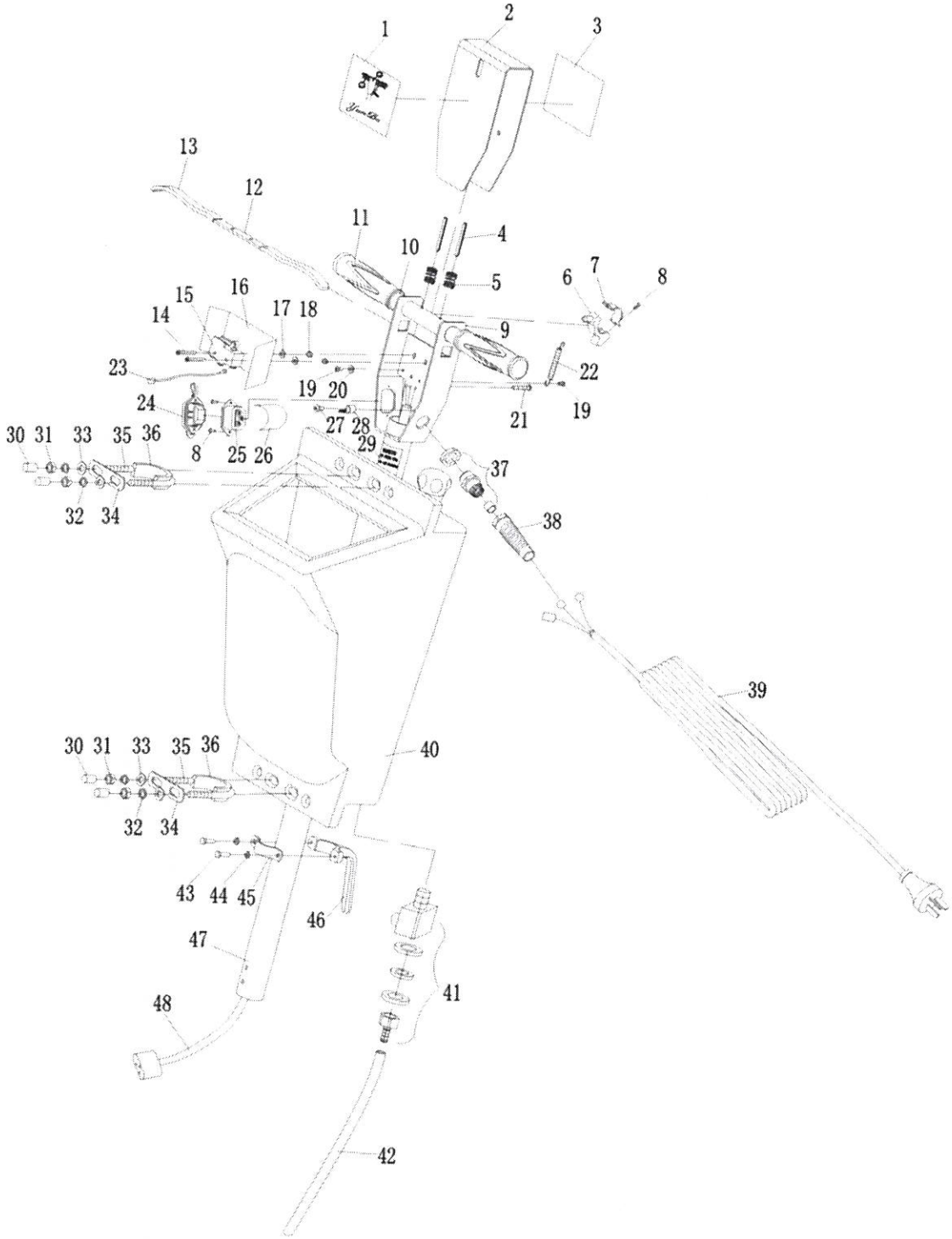

1、brand paster
2、cover
3、instruction paster
4、pin
5、spring
6、safety catch
7、safety catch support
8、countersunk screw
9、handle shelf
10、tube of handle
11、handle
12、switch lever
13、insulator
14、round screw
15、star-up switch
16、insulator
17、washer
18、hex head cap nut
19、round screw
20、cinquefoil washer
21、round screw
22、cable (coffee)
23、spring
24、socket cover
25、socket
26、insulator
27、pan screw
28、groove gasket
29、caution paster
30、plastic bolt
31、nut
32、spring gasket
33、washer
34、tank set dowel
35、U-shaped bolt
36、concave colloid
37、cable support
38、cable grommet
39、cable
40、deluxe tank
41、valve seat
42、hose
43、hex head cap screws
44、spring gasket
45、cable holder
46、cable support
47、wand
48、cable straight connector

BF519 EXPLODED VIEW

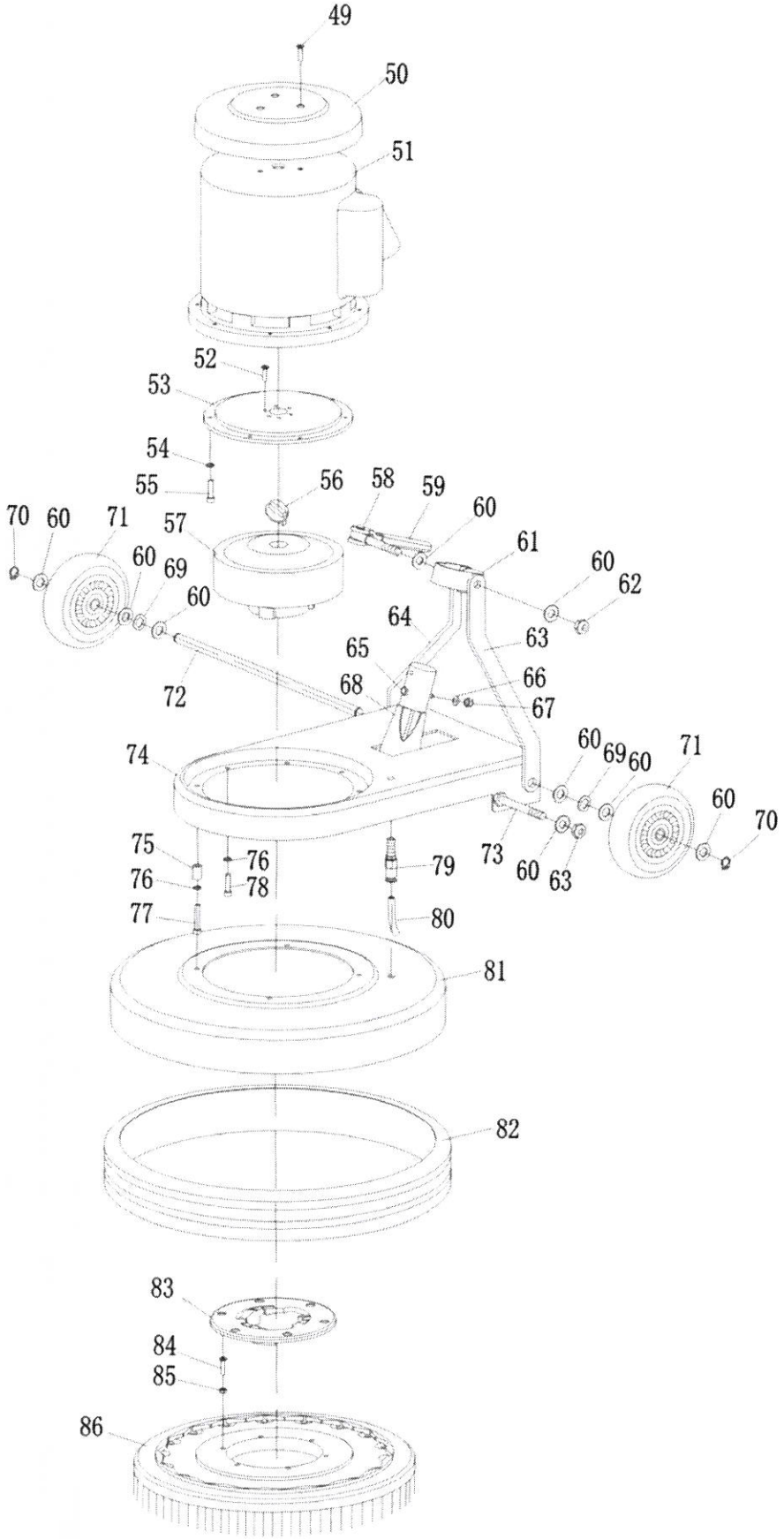

49、countersunk screw
50、motor housing
51、motor
52、socket head countersunk screw
53、connector plate
54、spring gasket
55、socket head screw
56、T connector piece
57、Moderator
58、locking bar
59、locking bar jacket
60、washer
61、locker
62、locknut
63、holder bar (left)
64、holder bar (right)
65、hex head cap screw
66、washer
67、nut
68、selector casing
69、washer
70、safety cap for axle
71、wheel
72、wheel axle
73、bolt
74、cover
75、base casting interlock
76、spring gasket
77、socket head screws
78、bolt
79、hose connector
80、hose
81、base casting
82、rubber buffer
83、drive hup plate
84、countersunk screw
85、nut
86、drive plate